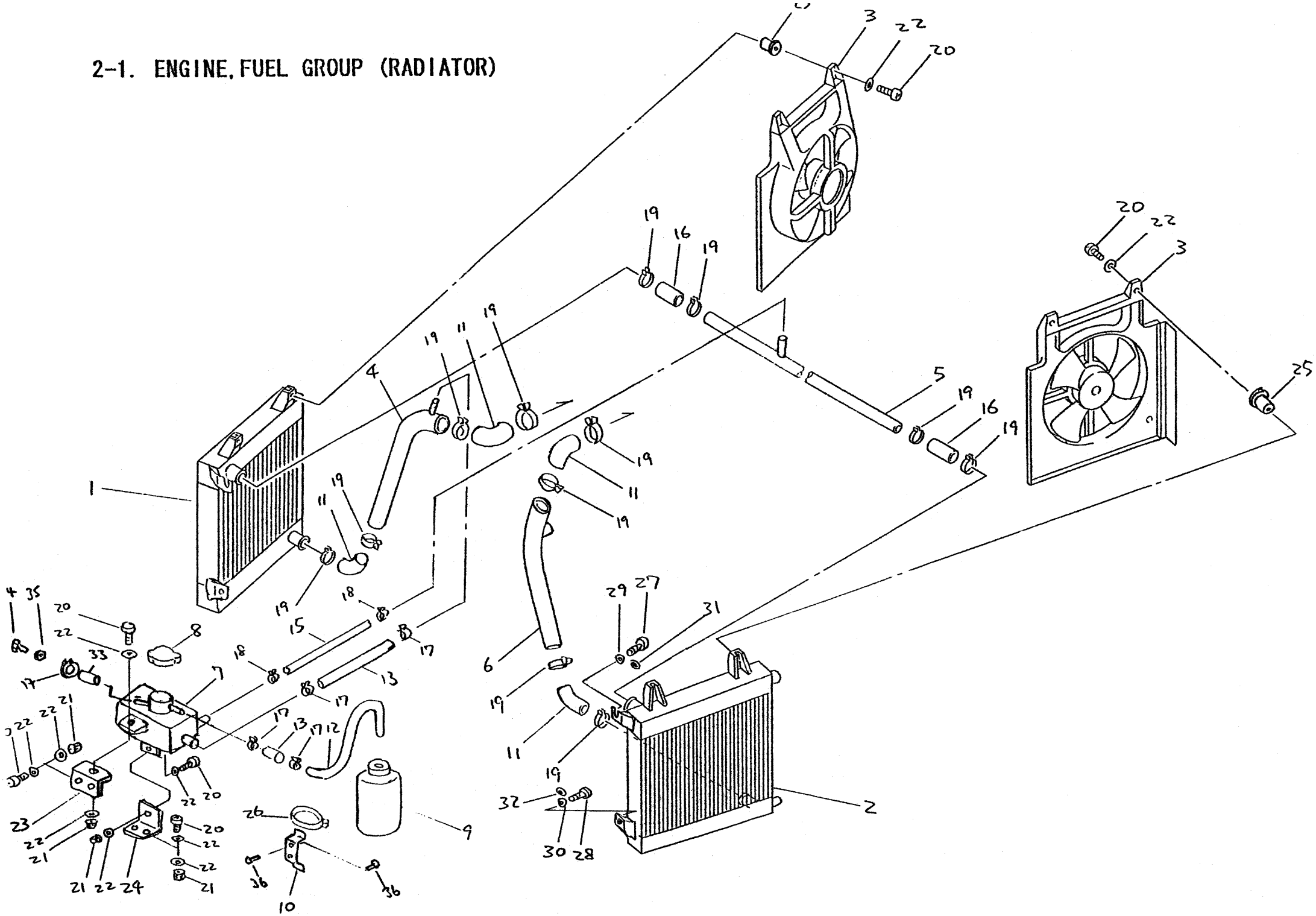2-1. ENGINE, FUEL GROUP (RADIATOR)